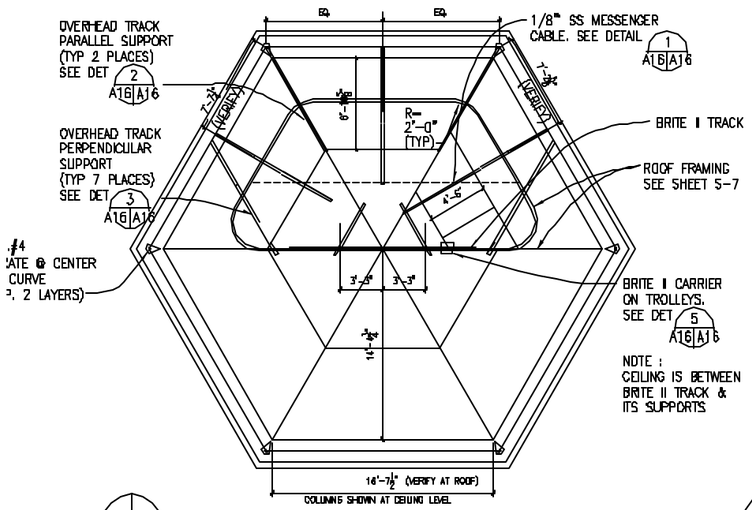

PLAN AT BRITE II TRACK AND WINCH FRAMING

SCALE: NOT TO SCALE

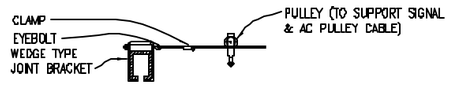

1 CABLE SUPPORT

A16 A16 SCALE: 3"=1'-0"

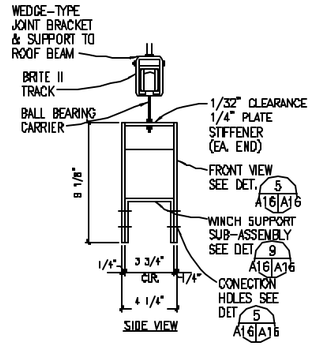

4 TROLLEY ASSEMBLY

A16 A16 SCALE: 3"=1'-0"

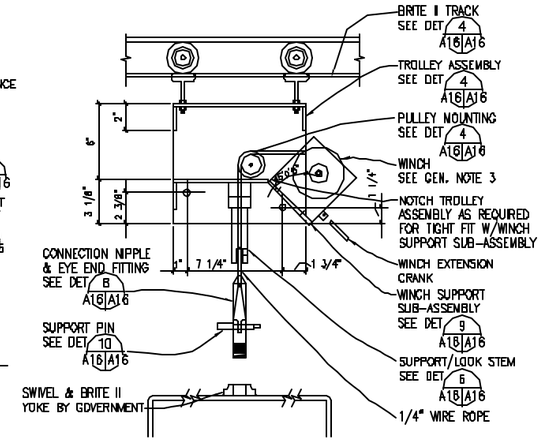

5 BRITE II CARRIER & WINCH MOUNTING

A16 A16 SCALE: 3"=1'-0"

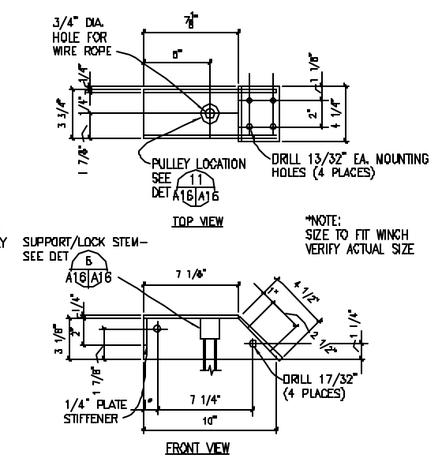

9 WINCH SUPPORT SUB ASSEMBLY

A16 A16 SCALE: 3"=1'-0"

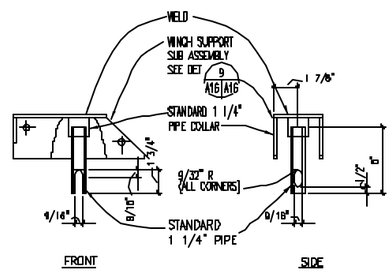

6 SUPPORT/LOCK STEM

A16 A16 SCALE: 3"=1'-0"

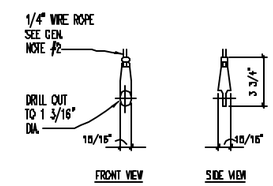

7 EYE END FITTING

A16 A16 SCALE: 3"=1'-0"

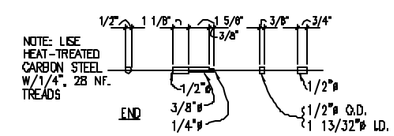

10 SUPPORT PIN

A16 A16 SCALE: 3"=1'-0"

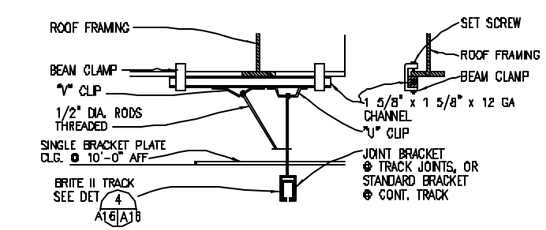

2 PARALLEL TRACK SUPPORT

A16 A16 SCALE: NOT TO SCALE

GENERAL NOTES:

1. TROLLEY ASSEMBLY MATERIAL IS 1/4" COLD ROLLED STEEL (ALL WELDED.)
2. 1/4" WIRE ROPE – USE EXTRA FLEXIBLE HOISTING ROPE 8 x 19 CONSTRUCTION
3. WINCH 500 LB. CAPACITY, WORM TEAR W/AUTOMATIC SELF-LOCKING BRAKE. HAND CRANK W/ ADJUSTABLE HANDLE.
4. TRACK SYSTEM 1 3/4" x 2 5/16" 11 GA. STEEL TRACK W/ JOINT BRACKETS & HANGING BRACKETS AS REQUIRED BY THE MANUFACTURER
5. CARRIERS: 2-WHEEL BALL BEARING TYPE W/THREADED STEM, 125 LB. CAPACITY PER CARRIER.

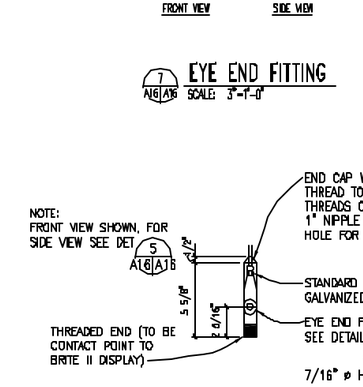

8 CONNECTION NIPPLE

A16 A16 SCALE: 3"=1'-0"

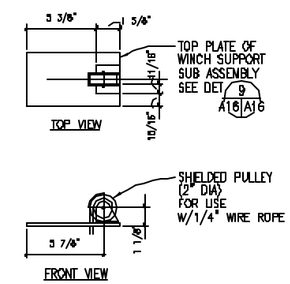

11 PULLEY LOCATION

A16 A16 SCALE: 3"=1'-0"

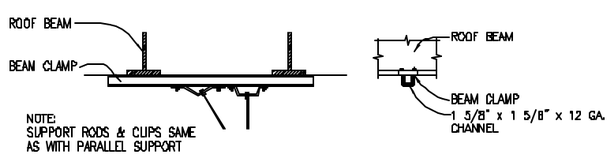

3 PERPENDICULAR TRACK SUPPORT

A16 A16 SCALE: NOT TO SCALE

SCALE: 1/2" = 1'-0"

CAD DETAILS SHEET TWO

AS SHOWN

A16

J:\0E0299\DWG\A\WSTA16.DWG 08/31/1999 16:45 REHicken