REVISIONS			
LTR	DESCRIPTION	DATE	APPROVED

DETAIL 3

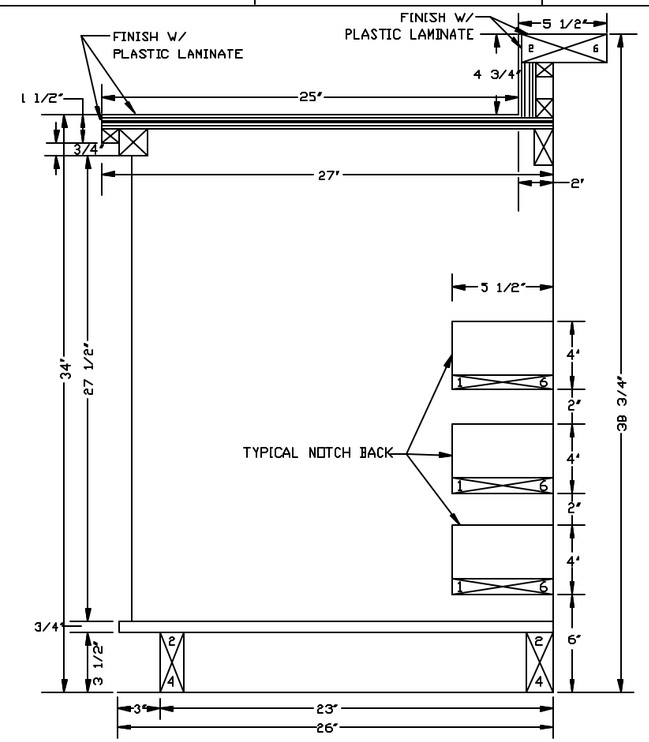

CONSOLE PROFILE (NAVAID MONITOR)

NOTE 3-2

FIGURE 5

SCALE 1"=4"

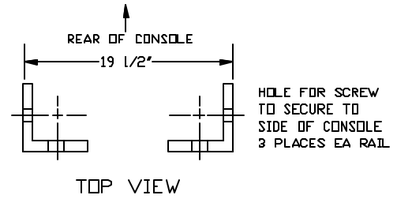

TOP VIEW

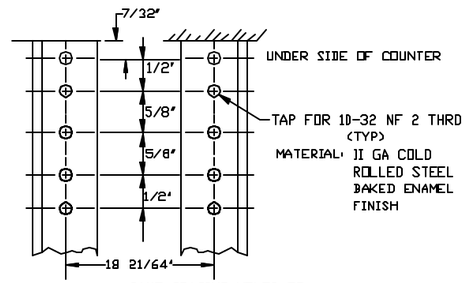

FRONT VIEW OF RAILS

DETAIL "C"

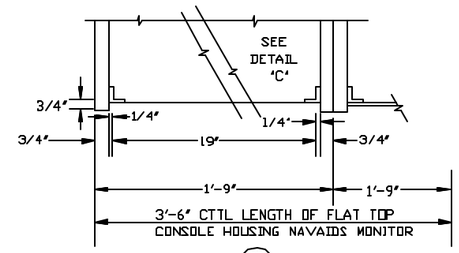

SECTION 1/3

NOTE 3-1

INSTALLATION NOTES:

3-1 FLAT TOP CONSOLE FOR ILS/VOR TACAN MONITORS TO BE BUILT IN 2-21" BASE UNITS W/ 1-42" LONG COUNTER TOP.

3-2 WHEN SPECIFIED PROVIDE LIFT-OUT DOORS FOR NAVAID MONITOR CONSOLE SIMILAR TO THOSE SHOWN IN FIGS. 2-4.

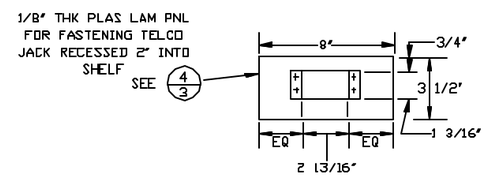

DETAIL "D"

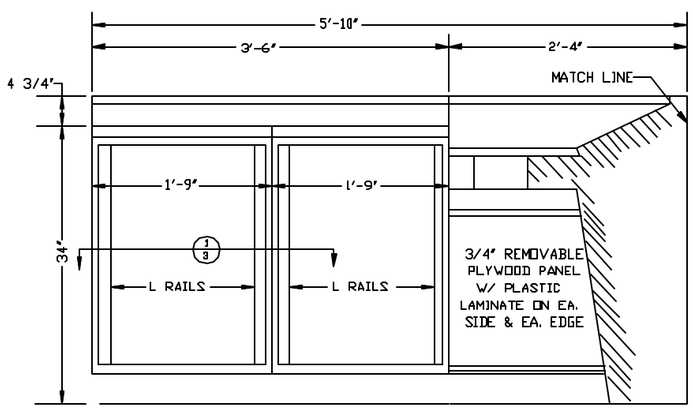

ELEVATION

NAVAIDS MONITOR

NOTE 3-1

SCALE 1-1/2"-1' (TYPICAL)

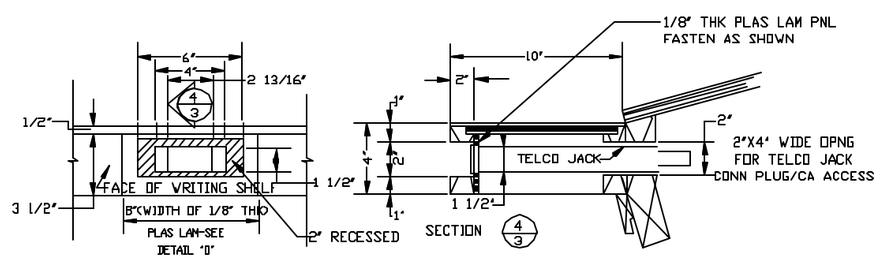

SECTION 4/3

DETAIL "B" (TELCO JACK)

DISTRIBUTION AUTHORIZED TO U.S. GOVERNMENT AGENCIES AND THEIR CONTRACTORS; FOR ADMINISTRATIVE OR OPERATIONAL USE, 1 MAY 1986. OTHER REQUESTS FOR THIS DOCUMENT SHALL BE REFERRED TO 38 MSS/EGD.

CURRENT CODE IDENT NO.	NEXT ASSBLY	USED ON	APPLICATION

UNLESS OTHERWISE SPECIFIED DIMENSIONS ARE IN INCHES-TOLERANCES ON FRACTIONS ± DECIMALS .XX ± .XXX ± ANGLES ±

DR	BROWN	18 MAY 95
CHK	NELSON	18 MAY 95
ENG		
AIR FORCE AUTHENTICATION	O'PECKO	18 MAY 95
AIR FORCE RELEASE		

U.S. AIR FORCE
38 ENGINEERING INSTALLATION GROUP (AFMC)
38 EIG/TS TINKER AFB, OK 73145-2713

TITLE
AIR TRAFFIC CONTROL TOWER
WRAP AROUND CONSOLE
MCP PROGRAM

SIZE	AIR FORCE CODE IDENT NO	DRAWING NO.
D		SK SCCS-3

SCALE NONE SKSCCS03.DGN SHEET 3 OF 8