REVISIONS			
LTR	DESCRIPTION	DATE	APPROVED

DETAIL 4

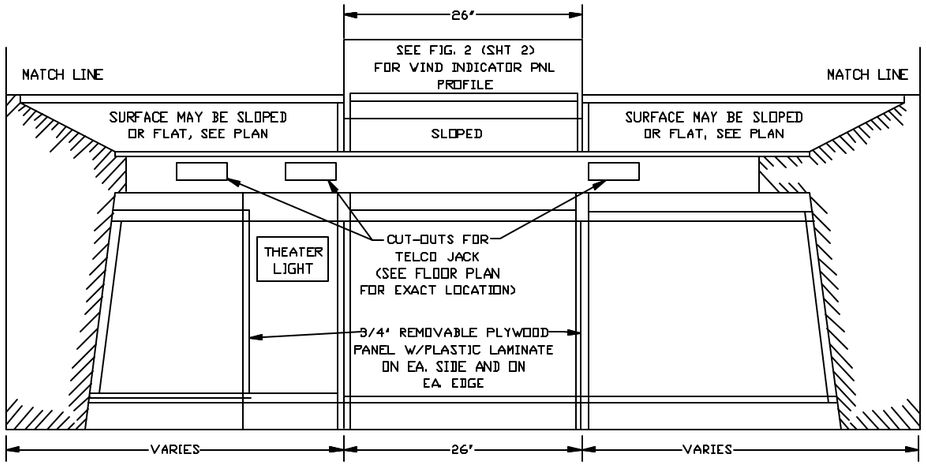

ELEVATION 2
LOCAL/GROUND POSITION (NTS)

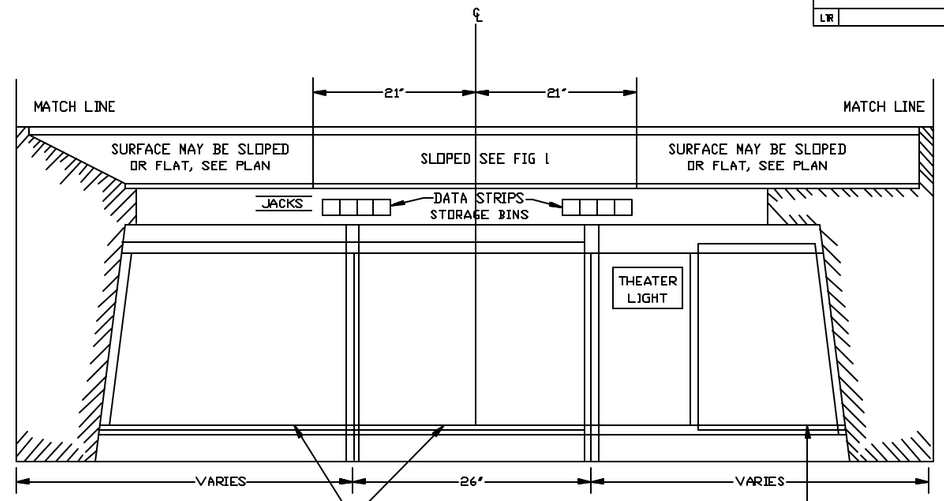

ELEVATION 3
FLIGHT DATA POSITION (NTS)

INSTALLATION NOTES:

4-1 STRIP HOLDER TO BE ATTACHED TO CONSOLE BY EI TEAM

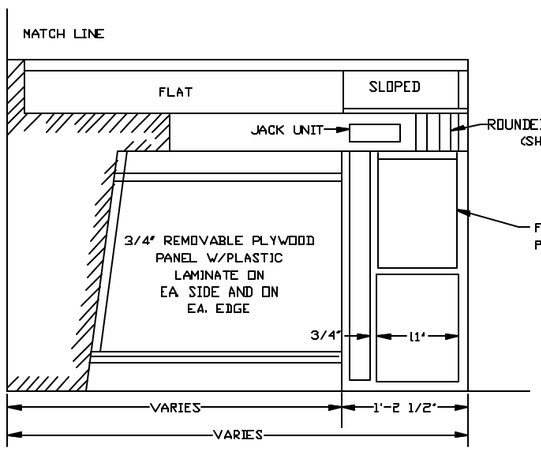

ELEVATION 4
SOF POSITION (NTS)

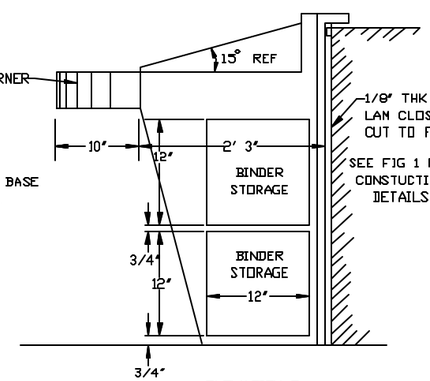

ELEVATION 5
SOF POSITION (NTS)
END VIEW

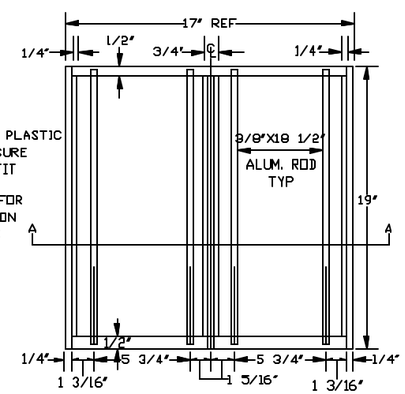

FLIGHT PROGRESS
STRIP BOARD HOLDER (NTS)
TOP VIEW

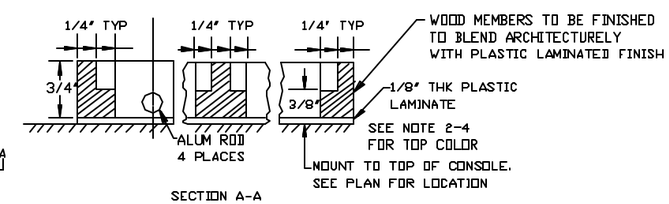

SECTION A-A

NOTE 4-1

FIGURE 6

DISTRIBUTION AUTHORIZED TO U.S. GOVERNMENT AGENCIES AND THEIR CONTRACTORS; FOR ADMINISTRATIVE OR OPERATIONAL USE, 1 MAY 1986. OTHER REQUESTS FOR THIS DOCUMENT SHALL BE REFERRED TO 38 MSS/EGD.

NEXT ASSEMBLY	USED ON
APPLICATION	

UNLESS OTHERWISE SPECIFIED DIMENSIONS ARE IN INCHES-TOLERANCES ON FRACTIONS ± DECIMALS .XX ± .XXX ± ANGLES ±

DR	BROWN	18 MAY 95
CHK	NELSON	18 MAY 95
ENG		
AIR FORCE AUTHENTICATION	O'PECKO	18 MAY 95
AIR FORCE RELEASE		

U.S. AIR FORCE
38 ENGINEERING INSTALLATION WING (AFMC)
38 MSS/EGD TINKER AFB, OK 73145-2713

TITLE
AIR TRAFFIC CONTROL TOWER
WRAP AROUND CONSOLE
MCP PROGRAM

SIZE	AIR FORCE CODE IDENT NO	DRAWING NO.
D	14941	SK SCCS-3

SCALE NOTED SKSCCS02.DGN SHEET 4 OF 8